Inline Dual Check With UFR Unmeasured-Flow Reducer

PATENT PENDING A.R.I. -LICENSED BY A.R.I. FLOW CONTROL ACCESSORIES LTD.

7211 and 7214 Series - Model Number Explanation

SPACE 1, 2, 3, & 4
Basic Dual Check Valve with UFR model number:
7211 = Inline Dual Check with UFR
7214 = Inline Accessible Dual Check with UFR

SPACE 5
(–) Standard

SPACE 6
size: 3 = 3/4"

SPACE 7
Inlet connection type:
A = Male meter thread integral
B = Male meter thread union
C = CTS (-22) Mac-Pak compression union
E = Female iron pipe integral
F = Female iron pipe union
G = CTS T-Series compression union
H = Meter swivel integral with saddle
J = Meter swivel integral
K = K-Style male thread integral
L = K-Style female thread union
M = Male iron pipe union
N = Meter female thread union
P = Male iron pipe thread integral
Q = K-Style male thread union
S = Male meter thread with O-ring seal integral
T = CTS T - Series compression integral
W = Yokebox Cradle
Y = Yoke style thread male integral
2 = CTS (-22) Mac-Pak compression integral

SPACE 8
Outlet connection type:
A = Male meter thread integral
B = Male meter thread union
C = CTS (-22) Mac-Pak compression union
E = Female iron pipe integral
F = Female iron pipe union
G = CTS T-Series compression union
H = Meter swivel integral with saddle
K = K-Style male thread integral
L = K-Style female thread union
M = Male iron pipe union
N = Meter female thread union
P = Male iron pipe thread integral
Q = K-Style male thread union
R = Copper flare integral
T = CTS T - Series compression integral
V = CTS Q - Series compression integral
2 = CTS (-22) Mac-Pak compression integral

SPACE 9
Blank

SPACE 10 & 11
The sizes for inlet and outlet connections:
1 = 1/2" 3 = 3/4"
2 = 5/8" 4 = 1"

Thread size of meter threads

METER SIZE	THREAD SIZE	MODEL NO. DESIGNATION
5/8	3/4"	3
5/8 x 3/4	1"	4
3/4	1"	4
1	1 1/4"	5

For Iron Yokes use the following designation

METER SIZE	THREAD SIZE	MODEL NO. DESIGNATION
5/8	–	2
5/8 x 3/4	–	3
3/4	–	3
1	_	4

SPACE 12
Meter Type Required
1 - Volumetric (V)
(Positive Displacement Meter)
2 - Multi-Jet Meter (M2)
Contact factory with name of meter manufacturer and model number for assistance in determining appropriate device.

COMPONENTS and REPAIR PARTS

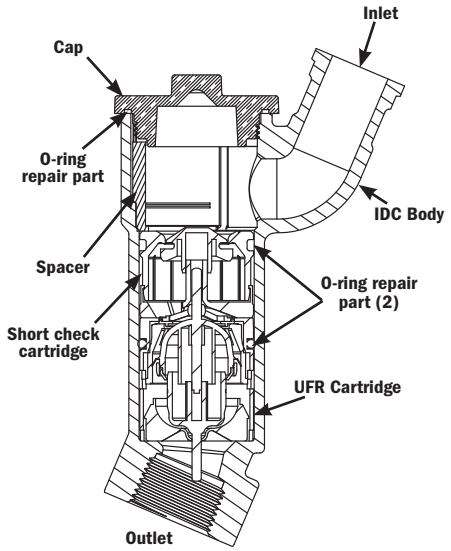

COMPONENTS and REPAIR PARTS

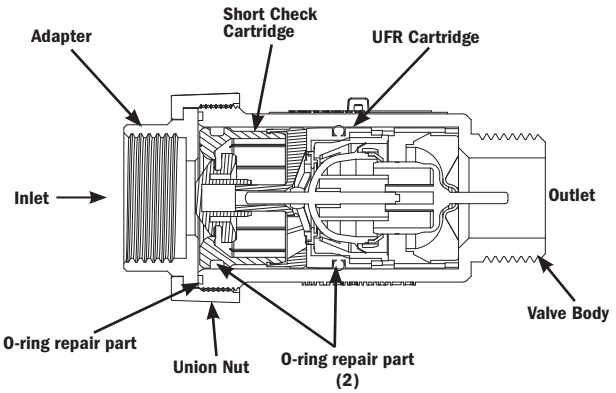

Inlet/Outlet and cartridges configuration may vary.

Contact factoryfor repair parts

HOW TO ORDER

Not all sizes or combinations available - contact factory.

UNIT REQUIRED (Example):
- Inline Dual Check with UFR
- Valve size 3/4"
- Outlet - Meter swivel integral (5/8 x 3/4 meter)
- Outlet - MNPT integral 3/4"
- For Volumetric Meter

Order Model 7214-3JP 431

SPACE 1, 2, 3, & 4	SPACE 5	SPACE 6	SPACE 7	SPACE 8	SPACE 9	SPACE 10	SPACE 11	SPACE 12
7214	–	3	J	P		4	3	1

(Installation, troubleshooting, and test procedures on opposite side)

WARNING: It is unlawful in **CALIFORNIA & VERMONT (effective 1/1/2010); MARYLAND (effective 1/1/2012); LOUISIANA (effective 1/1/2013) and the UNITED STATES OF AMERICA (effective 1/4/2014)** to use any product in the installation or repair of any public water system or any plumbing in a facility or system that provides water for human consumption if the wetted surface area of the product has a weighted average lead content greater than 0.25%. This prohibition does not extend to service saddles used in California, Louisiana or under USA Public Law 111-380.

Inline Dual Check With UFR Unmeasured-Flow Reducer

PATENT PENDING A.R.I. -LICENSED BY A.R.I. FLOW CONTROL ACCESSORIES LTD.

GENERAL INFORMATION

- **WARNING** - Do **NOT** use device with improper meter. The type of meter the device is to be used with is indicated in space 12 of model number:

  1 = Volumetric Meter

  2 = Multi-Jet Meter

  If uncertain of meter type being used, contact factory with meter manufacturer and model number.
- The device **MUST** be installed so that the arrow on the angle dual check UFR points in the direction of water flow.
- The device can be installed in either the horizontal or vertical position.
- The device requires a minimum line pressure of 14.5 PSI to operate correctly.
- If used in a system with a pressure regulating valve, best results will be obtained by locating the pressure regulating valve before the UFR or at least 25 feet after the UFR.
- Replacing the UFR cartridge at time the meter is changed out is recommended.

ASSEMBLY INSTRUCTIONS

- Service lines should be thoroughly flushed before installing device. Excessive pipe sealant or Teflon tape may prevent device from working properly. A suitable strainer should be installed upstream of the device.
- The device **MUST** be installed so that the arrow on the device points in the direction of water flow.
- DO NOT use Vaseline®, plumber's grease, or any other petroleum based product on seals or O-rings.
- Do not over-tighten O-ring cap seal or across body cylinder to avoid distortion.
- A pressure relief valve or an expansion tank is recommended downstream of the device if thermal expansion conditions are possible.
- Use only on cold water service lines under 110°F. Protect from freezing.
- The device is not recommended for pressures exceeding 175 PSI.

TROUBLESHOOTING

Problem	Possible Causes	Solutions
No flow in the line	1. Shut off valves have not been opened after installation.	1. Check shut off valves.
	2. The product is installed the wrong way round (against the flow direction).	2. Check direction of the product, and if necessary invert it in accordance with the flow direction.
	3. Mains pressure is less than 14.5 PSI	3. The UFR requires a minimum mains pressure of 14.5 PSI to work normally.
There is a leak in the house but the UFR is not working.	1. There is a lot of air in the system following the installation.	1. Purge air from the system by opening the taps in the house and check again.
	2. The leak in the house is more than 7.9 gallons per hour (cumulative).	2. The UFR is designed to pulsate for leaks between 0 and 7.9 gallons per hour. For flows above 7.9 gallons per hour the UFR is fully open and meter should register full flow on its own.
	3. Sealant has entered the sealing area of the UFR.	3. Remove the UFR from the line and clean out the sealant.

FIELD INSPECTION AND TEST PROCEDURE

A. DIS-ASSEMBLY

1. Remove the device body from the line (union nut and adapter can remain in the line). For 7214 Series remove device cap.
2. Remove the two check assemblies using care not to damage device components.
3. Visually inspect seals, sealing surfaces, etc. for debris or damage.

B. TESTING

1. Insert top check assembly into A.Y. McDONALD test kit as shown in drawing.
2. Add water to test kit level to upper red line - 42 inches (1.5 psig).
3. Observe water level for up to 5 minutes until water level stabilizes. Water level should not fall below lower red line - 28 inches (1.0 psig).
4. If water column falls below 28 inches the check assembly should be cleaned and re-tested or replaced.
5. Repeat steps B1 - B4 for bottom UFR check cartridge.

C. RE-ASSEMBLY

1. Clean and inspect device components.
2. Bottom UFR Check cartridge O-ring should be lightly lubricated with a NSF approved silicone lubricant.
3. Insert check assemblies into body correctly corresponding to flow direction on the device body.
4. Re-assemble device cap. Do not over-tighten.

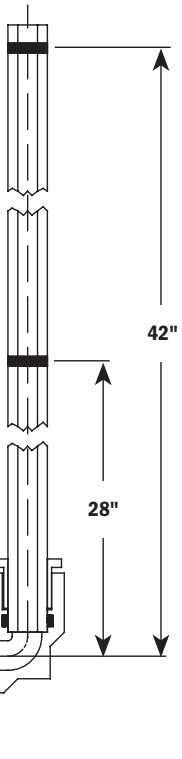

Contact factory for test kit

UFR Cartridge Test

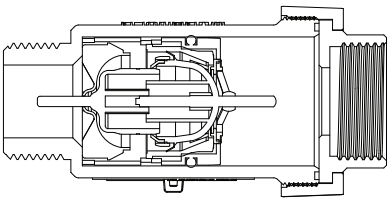
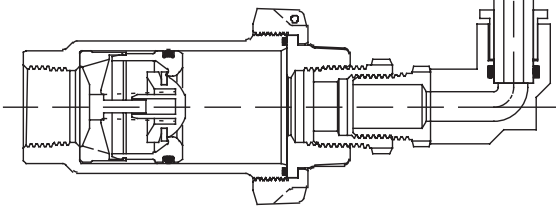
Top Check Test