6", 7", 8", & 10" Stainless Steel
McDonald Submersible Pumps

INSTALLATION RECORD

Date of Installation _____

Model Number _____ Serial Number _____

Depth of Well (Feet) _____ Depth of Water (Feet) _____

Pump Setting (Feet) _____ Riser Pipe Size _____

Wire Size (From Pump to Control Box) _____

Wire Size (From Control to Power) _____

Motor _____ Amps _____ H.P. _____ Volts _____

Control Box _____ Amps _____ H.P. _____ Volts _____

1. INSTALLATION INSTRUCTIONS

It is important that all submersible deep well pumps be installed by a licensed pump installer and that all electrical connections comply with the relevant electrical supply authority requirements.

The electrical connections and checks must be made by a licensed electrician and comply with applicable local standards.

These instructions are provided for guidance only, and assume a familiarity with submersible pump installation and commissioning procedures.

2. IMPORTANT

While this pump will handle moderate amounts of sand and abrasive materials, it must be understood that the life of the pump will be shortened if abrasive materials are pumped for an extended time. Therefore, do not install this pump in wells which continue to produce sand.

3. INSPECT THE EQUIPMENT

Before going on the job, open all packages and check all equipment to be certain everything is included and that no parts have been damaged during shipment. The pump should be checked for free rotation, and the motor and name plate inspected to be sure they are the correct horsepower, voltage and phase.

4. TEMPERATURES

The submersible motors on all McDonald units are constructed so that they will not be damaged by exposure to temperatures below freezing. It may be that in some cases the solution in the motor may be frozen in transit to the installation site. If so, the motor should be warmed sufficiently to thaw it before installing in the well.

These motors may be installed in wells where the water temperature is as high at 85°F. For higher temperature installation, consult the factory.

5. WATER SUPPLY

To guard against installing a pump in aggressive or abrasive water, it is suggested that an analysis of the well water be submitted to an authorized testing authority prior to installation of the pump. Damage to the pump or motor caused by abrasive or aggressive water is not covered by warranty.

It is important to know the approximate replenishment rate of the well before selecting a pump. Select a pump with a maximum of 10% less discharge than the replenishment rate of the well.

Where wells are drilled into aquifers comprising of sand or fine gravel, it is important that they be adequately screened to prevent the ingress of these materials into the water being pumped. It is also important that the well be cleaned prior to the installation of the pump, and that the pumps must not be used for "bailing" or developing the well.

In the event that the water is entering the well from a level above the pump ("a cascading well"), or where the pump is installed in a large diameter well, or in a river or other open water sources, a flow sleeve is required over the pump to ensure that all water being pumped is drawn over the full length of the motor's surface. Minimum water velocity past a motor for adequate cooling should be: See Table 1.

TABLE 1

	Motor Rating HP	Minimum Cooling Flow - ft/sec
6"	5-60	1.00
7"	30-75	0.66
8"	40-75	0.66
	100-150	1.64
10"	125-250	1.64

6. INSTALLATION

A) Depth of Installation –

The maximum allowable submergence for A.Y. McDonald Motors is 984 ft. Ensure that the pump is installed at least 10 feet above the bottom of the well, and 10-20 feet below the maximum draw down level.

B) Check Valve –

Most A.Y. McDonald submersible deep well pumps are supplied with a check valve. If a particular pump does not contain an internal check valve, a check valve should be installed in the discharge line within 25 ft of the pump and below the draw down level. For installations greater than 240 feet head, or when used as a pressure system, it is recommended that an additional check valve be fitted approximately no more than 200 feet vertically above the pump and every 200 feet vertically thereafter. The fitting of this check valve will limit potential water hammer and consequent pump damage.

C) Number of Starts –

Care must be taken to ensure the pump does not short cycle. Keeping the number of starts per day under those listed in the table will prevent excess motor wear and promote a longer pump unit life.

	Motor Rating	Number of Starts
6"	5-60	25/hr
7"	30-75	17/hr
8"	40-75	15/hr
	100-150	10/hr
10"	125-250	10/hr

WARNING: It is unlawful in **CALIFORNIA & VERMONT (effective 1/1/2010); MARYLAND (effective 1/1/2012); LOUISIANA (effective 1/1/2013) and the UNITED STATES OF AMERICA (effective 1/4/2014)** to use any product in the installation or repair of any public water system or any plumbing in a facility or system that provides water for human consumption if the wetted surface area of the product has a weighted average lead content greater than 0.25%. This prohibition does not extend to service saddles used in California, Louisiana or under USA Public Law 111-380.

7. ELECTRICAL CONNECTION

All wiring should conform to the requirements of local and national code. **POWER CONNECTIONS AND WIRING MUST BE Carried out by a licensed electrician.**

WARNINGS:

A. Before installing or servicing your pump, check to ensure that electrical power is turned off and disconnected.

B. Single phase motors with built-in thermal overloads may restart automatically and unexpectedly. Observe Warning (A).

A) Wiring Connection –
The motor lead to power cable connection must be made using a waterproof splice. Improperly spliced connections will lead to future service problems. All electrical connections should be checked before the pump is installed in the well. A 500-volt megohm meter (megger) can be used to test lead insulation as well as the splice connection. Check values before and after installing the pump in the well. If values become substantially lower when installed in the well, the insulation may have been damaged during installation. Check splice locations and power cable for damage and repair or replace.

B) Grounding –
Failure to ground electrically operated equipment may result in serious electric shock. Refer to local code requirements. All pump motors are equipped with a GROUND lead which must be connected to the GROUND of the incoming power supply. Furthermore, control boxes and starters must also be GROUNDED. Do not use metal drop pipe as the GROUND return under any circumstances.

C) Motor Protection –
Various switching devices may be connected directly into the supply line to the 230 volt motor control boxes, provided the switching device used has an adequate current rating. If the current rating of the switch is not adequate, a contactor must be wired into the supply and the switching device used to control the contactor's coil. In any case, where a single phase motor has a control (starter) box, no additional switching devices should be wired between the motor and box.

In the case of three phase motors, all switching devices should be wired to the starter's control coil, and under no circumstances they should be used to directly break the supply circuit to the pump.

The normal thermal overload relays or heaters used for standard motors will not trip fast enough to protect a submersible motor, and special extra quick-trip protection must be used. For single-phase motors, this protection is provided by the specially designed and selected protection in the control box. For three-phase submersible motors, protection must be provided by the thermal overload relays in the magnetic motor starter.

THE LIMITED WARRANTY OF THREE-PHASE SUBMERSIBLE MOTORS IS VOID IF PROPER CLASS 10 OVERLOAD PROTECTION IS NOT USED ON ALL THREE LINES.

D) Direction of Rotation –
Before finalizing wiring connections, check that the motor rotates in a counter-clockwise direction (looking into the discharge outlet). Three-phase motors will operate in reverse rotation if improperly connected to the power supply or magnetic starter. A three-phase pump motor unit running backwards will develop about 50% of its rated output. Three-phase motors may be reversed by interchanging any two of the three motor leads at the magnetic starter.

E) Lightning Arresters -
Lightning arresters are recommended to protect the motor from the effects of electrical storms. Single phase motors require one arrester, while three phase motors require two. Install the lightning arresters following manufacturer's installation instructions.

LIGHTNING PROTECTOR

SINGLE-PHASE
Terminal Board of Control Box

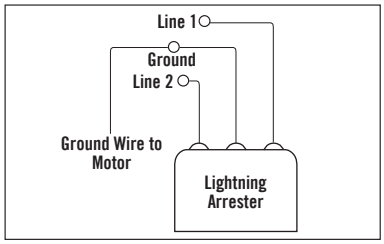

THREE-PHASE
Magnetic Starter

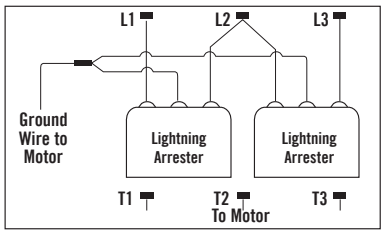

8. INITIAL START-UP

Before connecting the pump outlet pipe from the well, a pressure gauge and gate valve should be screwed into the top of the well cap. Never start the pump at full flow for the first time. It is recommended that the gate valve be only slightly open to start the pump. Do not run the pump with the gate valve closed for more than a few seconds as the motor will overheat, causing permanent damage not covered by warranty.

Close the gate valve for a very short period and observe the pressure. If the pressure is significantly less than calculated, the pump may be running backwards (3 phase motors). Interchange two power leads to change direction of rotation.

Slowly open the gate valve to allow water to flow. Never open the gate valve abruptly, as this may raise sand or silt deposits. For the first ten to twenty minutes of operation, it is suggested to keep the gate valve only slightly open, to maintain a low flow. This low flow will prevent, in the case of excessive sand in the water, the pump from seizing. Catch some of the discharge water in a large container and allow solids to settle out. If little or no sand appears, open the valve to allow full flow until discharge water is clear.

Use a voltmeter to check voltage at the starter while the pump is running. The average voltage of all phases must be within 10% of the motor rating. The voltage variation between phases must not be more than 1%. Use a hook-on ammeter to read the current and verify against the service factor rating of the motor. In a 3 phase system, check that the currents of each lead are approximately the same. The highest amp reading should not be more than 10% difference from the average of all three amp readings. If problem persists, consult with the power company to improve the voltage balance between incoming lines.

ATTENTION! Important information for installers of this equipment!
This equipment is intended for installation by technically qualified personnel. Failure to install it in compliance with national and local electrical codes, may result in electrical shock or fire hazard, unsatisfactory performance, and equipment failure. **Retain this information sheet with the equipment for future reference.**

WARNING - Serious or fatal electrical shock may result from failure to connect the motor, control enclosures, metal plumbing, and all other metal near the motor or cable, to the power supply ground terminal using wire no smaller than motor cable wires. To reduce risk of electrical shock, disconnect power before working on or around the water system. Do not use motor in swimming areas.

TABLE A - CABLE SELECTION

Single-Phase, Three Wire Cable, 60 HZ (Service Entrance to motor)

Motor Rating		Copper Wire Size												
Volts	HP	14	12	10	8	6	4	3	2	1	0	00	000	0000
230V	5	0	0	180*	280	450	710	890	1110	1390	1740			
	7 1/2	0	0	0	200*	310	490	610	750	930	1140	1410	1720	
	10	0	0	0	0	250*	390	490	600	750	930	1160	1430	1760
	15	0	0	0	0	170*	270*	340	430	530	660	820	1020	1260

1 foot - .3048 meter

Three-Phase, Three Wire Cable, 60 HZ 200 and 300 volts (Service Entrance to motor)

Motor Rating		Copper Wire Size												
Volts	HP	14	12	10	8	6	4	3	2	1	0	00	000	0000
230V 60HZ	5	140*	230	370	590	920	1430	1790						
	7 1/2	0	160*	260	420	650	1020	1270	1560					
	10	0	0	190*	310	490	760	950	1170	1440				
	15	0	0	0	210*	330	520	650	800	980	1200	1470		
	20	0	0	0	0	250*	400	500	610	760	930	1140	1380	
	25	0	0	0	0	0	320*	400	500	610	750	920	1120	1360
	30	0	0	0	0	0	260*	330*	410*	510	620	760	930	1130
460V 60HZ	5	590	950	1500										
	7 1/2	420	680	1070	1690									
	10	310	500	790	1250									
	15	0	340*	540	850	1340								
	20	0	0	410*	650	1030	1610							
	25	0	0	0	530*	830	1300	1620						
	30	0	0	0	430*	680	1070	1330	1640					
	40	0	0	0	0	500*	790	980	1210	1490				
	50	0	0	0	0	0	640*	800	980	1210	1480			
	60	0	0	0	0	0	540*	670*	830*	1020	1250	1540		
	75	0	0	0	0	0	0	0	680*	840*	1030	1260	1520	
	100	0	0	0	0	0	0	0	0	620*	760*	940*	1130	1380
	125	0	0	0	0	0	0	0	0	0	0	740*	890*	1000*
	150	0	0	0	0	0	0	0	0	0	0	0	760*	920*
	175	0	0	0	0	0	0	0	0	0	0	0	0	810*
	200	0	0	0	0	0	0	0	0	0	0	0	0	0

Lengths marked * meet the U.S. National Electrical Code ampacity only for individual conductor 75°C cable. Only the lengths without * meet the code for jacketed 75°C cable. Local code requirements may vary.

CAUTION!! Use of wire sizes smaller than determined above will void warranty, since low starting voltage and early failure of the unit will result. Larger wire sizes (smaller numbers) may always be used to improve economy of operation.

(1) If aluminum conductor is used, multiply above lengths by 0.61. Maximum allowable length of aluminum wire is considerably shorter than copper wire of same size.

BASIC WIRING DIAGRAMS

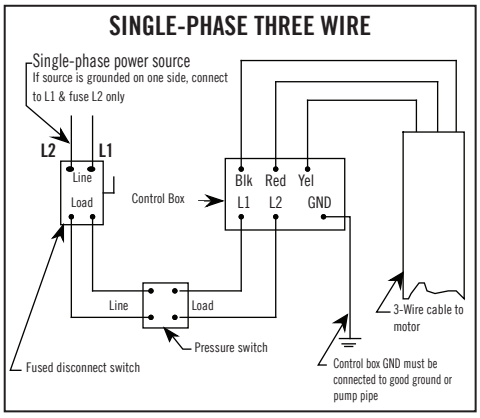

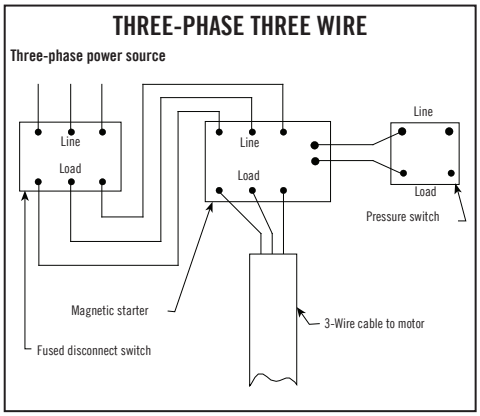

WITHOUT YOU THERE IS NO US.

4800 Chavenelle Road | Dubuque, IA 52002

1-800-AY-CARES | aymcdonald.com | aymcdonaldu.com
(292-2737)